FELIX 4 KOMBI

Bag Housing with Handle

#9824FC FELIX 4 KOMBI Ice Blue (White/Blue)
#9828FC FELIX 4 KOMBI Onyx (Black)
#9830FC FELIX 4 KOMBI Rosso (Red)

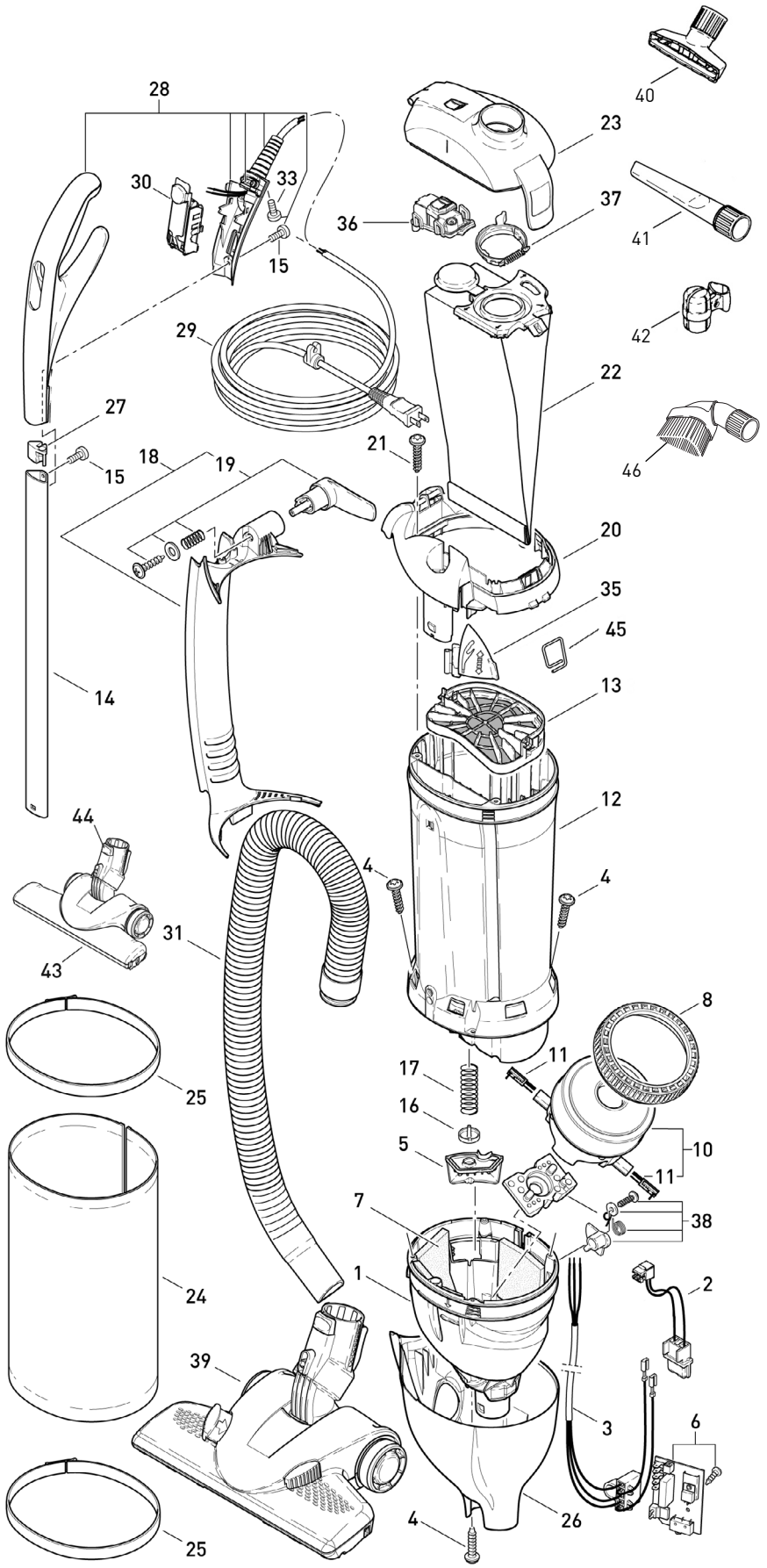

9824FC Ice Blue (White/Blue) Machines

Pos.	Part #	Description
1	7078GS	Air duct
2	7064	Internal wiring harness ET
3	7071	Internal cable
4	01016	Screw STS 4x16 - T20
5	7056GS	Valve cover
6	7111ER	Printed circuit board 120V
7	7098	Sound insulation
8	1047	VAC motor seal
9	7009	Rubber mounting
10	7041ER	VAC motor 1000 Watts
11	05140S	Carbon brush set
12	7143ER	Dust bag housing
13	7012ER	Motor Protection filter
13a	7185ER	Optional Anti-Odor Charcoal filter
14	7081ER	Handle tube
15	0127	Screw M 4x10K
16	7025	Valve disc
17	7028ER	Valve spring set (old & new)
18	7090GS	Hose duct
19	7027GS	Cable hook
20	7093WE	Cover, dust bag housing w/35&45 - white
21	01017	Screw STS 4x20 - T20
22	7029ER	Dust bag
23	7091WE	Filter cover - white
24	7095ER02	Exhaust filter
25	7017GS	Exhaust filter clamp - gray black
26	7159WESE	Lower housing - white
27	7145GS	Tube plug
28	7164WE	Handle complete w/screws - white
29	7127DG	Cable - dark gray
30	7038WE	Switch assembly, cpl. - white
31	7050SB	Hose cpl.
33	0103	Screw C3.9x16
35	7082WE	Handle release lever, cpl
36	7094ER	Filter Indicator, cpl.
37	7018OR	Retaining ring w/spring
38	7032ER	Switch lever, cpl.
39	7260GS	Kombi nozzle (Incl. w/Kombi)
	7248ER	Brush strip w/cap for Kombi
40	1491GS	Upholstery nozzle - gray black
41	1092GS	Crevice nozzle - gray black
42	7097WE	Double attachment clip - white
43	7200GS	Premium Parquet Brush
	7207ER	Brush Strip Set (2 pcs. for 7200)
44	7212GS	Button cover for 7200
45	7024ER	Cover latch spring

#9828FC Onyx (Black/Silver) Machine Exceptions

18	7090SW	Hose duct - black
19	7027SW	Cable hook
20	7093SW	Cover, dust bag housing w/35&45 - black
23	7091SW	Filter cover - black
24	7095ER04	Exhaust filter
25	7017SB1	Exhaust filter clamp - silver
26	7173SE	Lower housing - black
28	7164GSSW	Handle complete w/screws
30	7038SW	Switch assembly, cpl. - black
35	7082SW	Handle release lever, cpl
41	1092SW	Crevice nozzle - black
42	7097SW	Double attachment clip - black

#9830FC Rosso (Red) Machine Exceptions

18	7090DR	Hose duct
19	7027DR	Cable hook
20	7093DR	Cover, dust bag housing w/35&45 - red
23	7091DR	Filter cover - red
24	7095ER12	Exhaust filter
25	7017SB	Exhaust filter clamp - silver
26	7173SE	Lower housing - red
28	7164GSSW	Handle complete w/screws
30	7038SW	Switch assembly, cpl.
35	7082SW	Handle release lever, cpl
41	1092SW	Crevice nozzle - black
42	7097SW	Double attachment clip - gray black